LEAFLET

FUGLESANGS

Pumper • Tetningsteknikk • Service

SKD – SPLIT CASE PUMPS

50-60 Hz

ATTESTATION DE CONFORMITÉ SANITAIRE

ACS

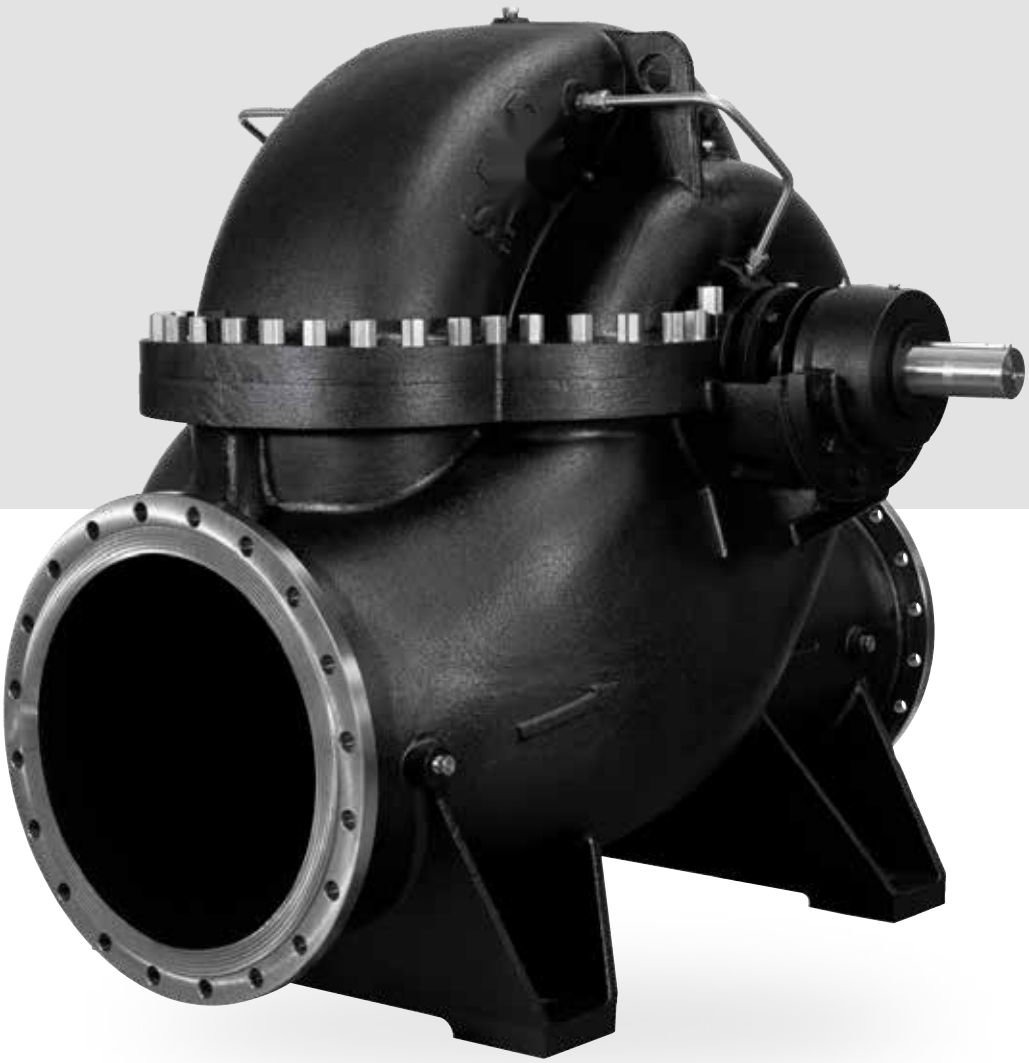

MADE IN ITALY

SKD

SKD 125-335
Single impeller pump

SKD 250-630-2
Double impeller pump

SKD 500-550
Single impeller pump

SKDX - SKDXD

Stainless steel version
Superduplex stainless steel version

SKD-M

Bronze version

SKDVZ

SKDVZ 150-400
Complete vertical unit with motor

SKDZ

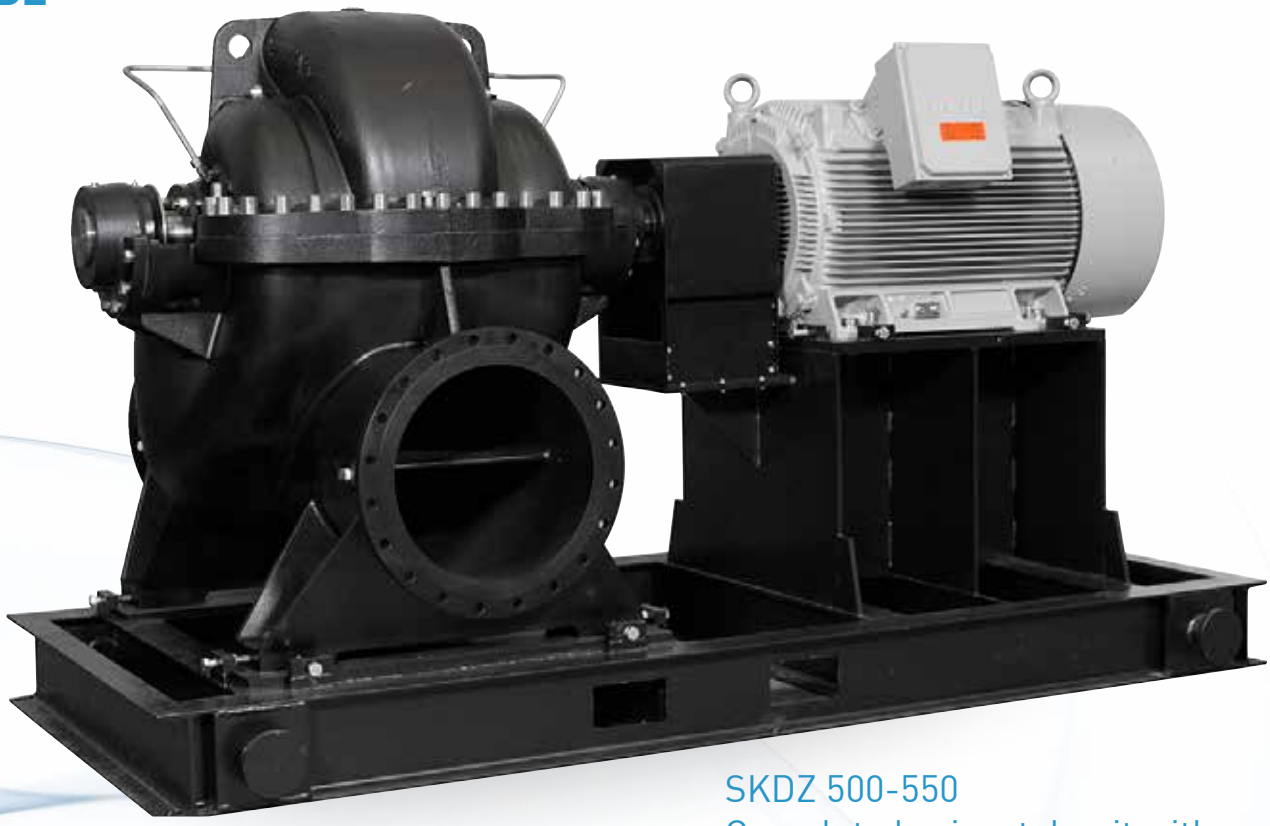

SKDZ 500-550
Complete horizontal unit with motor

SKDZ 300-500
Complete horizontal unit with motor

THE ADVANTAGES OF SKD SERIES

SAFE

- Axially divided volute: semplified service thanks to the possibility of removing the cover to inspect the pump's rotor without removing from the application the pump itself.
- Final balancing according to ISO 1940 on the completely assembled rotor to reduce vibrations and stresses.
- Seal within pump body and cover with fiber gasket for easy and fast maintenance.

ADAPTABLE

- In line inlet/outlet: for an easy installation both in horizontal and vertical configurations.
- Different shaft seal systems availables: the standard one is with soft packing. On request mechanical seal with components, single or double cartridge seals. Flushing from outlet or from outside according to different plans.
- On demand vibration and temperature sensors system for a complete tracking of the pump.
- Wide performance range. Flow till 4500 m³/h, head till 320 m
- Availability of different materials for multiples applications.

EFFICIENT

- Pump projected with integrated simulations systems: Hydraulic design optimized with CFD systems to maximize the performances (efficiency up to 87%); structural analysis (FEA) to assure strength and safety; modal analysis, roto-dynamic simulation and fatigue analysis to have more reliability, duration, fatigue tollerance.

RESISTANT

- Double volute design for the whole series, that means: reduction of radial loads on bearings and reduction the stress on the seals; decrease of vibrations and noise; increase the efficiency.
- One piece casted impeller, statically and dynamically balanced according to ISO 1940. The double suction drawing delete the axial stresses.
- Fully stainless steel shaft dimensioned according to DIN743 and protected by stainless steel bushing.
- Double wear ring replaceables: two wear rings fixed on the impeller and two wear rings fixed to the body, to assure wear resistance and protection to the impeller and the pump body.
- Bearings: grease lubrication through greaser or with oil (on request) and dimensioned for a duration greater than 100.000 continuous functioning hours (MTBF). Duration verified according to DIN 743. Bearings support safety sealed to prevent water entrance.

MADE IN ITALY

- Made in Italy, designed, manufactured and tested in Italy.

THE ADVANTAGES OF SKD SERIES

1. In line inlet/outlet: easiness of installation both for horizontal and vertical configuration.

2. Axially divided volute: semplified service thanks to the possibility to remove the cover and inspection the pump's rotor without remove the pump itself from the application.

3. Double volute design on all the range: reduction of radial loads on bearings. Reduction of stress on the seals, decrease of vibrations and noisness, efficiency increase.

4. Pump projected with integrated simulations systems: Hydraulic design optimized with CFD systems to maximize the performances
(efficiency up to 87%); structural analysis (FEA) to warranty robustness and safety; modal analysis, roto-dynamic simulation and fatigue analysis to have more reliability, duration, fatigue tollerance.

5. One piece casted impeller, statically and dynamically balanced according to ISO 1940. The double suction draving delete the axial stresses.

6. Shaft totally in stainless steel dimensioned according to DIN743 and protected with stainless steel bushing.

7. Final balancing according to ISO 1940 on completely assembled rotor to reduce vibrations and stresses.

8. Double wear ring: two wear rings fixed on the impeller and two wear rings fixed on the body warrants wear on the rings only (replace-ables) and protect impeller and pump body.

9. Bearings: grease lubrication through greaser or with oil (on request) and dimensiond for a duration higher to 100.000 continuous functio-
ning hours (MTBF). Duration verified according to DIN 743. Bearings support safety sealed to prevent water entrance.

10. Different shaft seal systems availables: the standard one is with gland packing. On request mechanical seal with components, single or double cartridge seals. Flushing from outlet or from outside according to different plans.

11. Seal within pump body and cover with fiber gasket for easy and fast maintenance.

12. Possibility to have the pump with vibration and temperature system for a complete tracking on the pump.

13. Wide performance range. Till 4500 m^3/h, head till 320 m

14. Availability of different materials for multiple applications.

15. Made in Italy, designed, manufactured and tested in factories in Italy.

TECHNICAL FOCUS

DOUBLE VOLUTE DESIGN: FOR STRESSES REDUCTION AND PUMP'S LIFE INCREASE

- Significant reduction of the radial stresses acting on the rotor
- Increasing of bearing and mechanical seals' life duration, reduction of service costs
- Vibrations and noise reduction

DOUBLE WEAR RING TO PRESERVE THE MOST IMPORTANT COMPONENTS

- Impeller, body and cover protect from recyprocal wear
- Operating time increased and reduction of maintenance costs
- Performances increased

CODIFICATION

-	SKD	4P	80	355	340	AQ	-	-	-	-
1	2	3	4	5	6	7	8	9	10	11

1	Design	-	**Specific pump or complete unit for 50 Hz rotation speed.**
		6	**Specific pump or complete unit for 60 Hz rotation speed.**
2	Series	SKD	**Bare shaft pump for horizontal installation**
		SKDV	**Bare shaft pump for vertical installation**
		...X, R...	**Special versions** • Refer to separate page for more informations.
		...Z	**Complete unit**
		...W	**Complete unit without motor**
3	Poles	2P	**2-poles operation (3000rpm 50Hz – 3600rpm 60Hz)**
		4P	**4-poles operation (1500rpm 50Hz – 1800rpm 60Hz)**
		6P	**6-poles operation (1000rpm 50Hz – 1200rpm 60Hz)**
		8P	**8-poles operation (750rpm 50Hz – 900rpm 60Hz)**
4	Delivery DN	80	DN80 PN25 (UNI EN 1092)
		125	DN125 PN16 (UNI EN 1092)
		150	DN150 PN16, PN25 (UNI EN 1092)
		200	DN200 PN16, PN25 (UNI EN 1092)
		250	DN250 PN16, PN25 (UNI EN 1092)
		300	DN300 PN16, PN25 (UNI EN 1092)
		500	DN500 PN10 (UNI EN 1092)
5	Impeller DN	270	
		315	
		335	
		400	
		450	
		560	
		630	
		750	
6	Actual impeller diameter		
7	Impeller material		
8	Nominal power in HP		
9	Nominal voltage		
10	Frequency		
11	Motor efficiency class		**Motor efficiency class according to IEC 60034-30. Make reference to the regulation (EU) 2019/1781.. •.**

For company reasons some information could be omitted or espressed in a different way •

OPERATION LIMITS - STANDARD VERSIONS

50 Hz

			1/min (rpm)			
			750	1000	1500	3000
1	Qmin – Qmax	m^3/h	1200 - 3500	350 - 4500	80 - 2500	200 - 750
2	H (Q=0)	m	24,6	55,5	318	178
3	PN	bar	10	10	16 - 25 - 40	16 - 25
4	P_2max	kW	200	450	1200	315
5	T	°C	80 (150*)			
6		g/m^3	50 (100*)			
7		min	3 (Water temp. 20°C)			

60 Hz

			1/min (rpm)			
			900	1200	1800	3600
1	Qmin – Qmax	m^3/h	350 - 4200	400 - 4400	110 - 2900	220 - 860
2	H (Q=0)	m	35,6	80,1	209	150
3	PN	bar	10	10	16 - 25	16
4	P_2max	kW	315	450	900	315
5	T	°C	80 (150*)			
6		g/m^3	50 (100*)			
7		min	3 (Water temp. 20°C)			

(*) On request

1. **Flow range •**
2. **Max head (Q=0)**
3. **Max operating pressure (the maximum pressure allowed considering the sum of the max suction pressure and of the head with zero flow rate [Temperature of the pumped liquid 20°C]). For pressure temperature limits refer to the tables in the technical appendix**
4. **Max.power**
5. **Temperature of the pumped liquid**
6. **Max solids content**
7. **Max working time with closed delivery (for water at 20°C)**

INLET/OUTLET POSITIONING

The SKD pumps are availables with two possible inlet/outlet orientations, to be specified at the order confirmation:

- Clockwise rotation DE (drive-end) side view (Pic.1): in this case suction is on the right and outlet is on the left, looking at the pump from the DE side view. This orientation is suitable for coupling with electric motors, and with the most of endothermic engines.
- Counterclockwise rotation DE (drive-end) side view (Pic.2):in this case the suction is on the left and delivery is on the right part, looking at the pump from the DE side view. This orientation is suitable for coupling with electric motors.

In case of bare shaft pumps purchasing, it's recommended to verify always the matching within the pump's rotation sense and motor one. In case there's no specification on orientation, it will be supplied the counterclockwise rotation configuration looking from DE side view (Pic.2)

Clockwise rotation / DE side

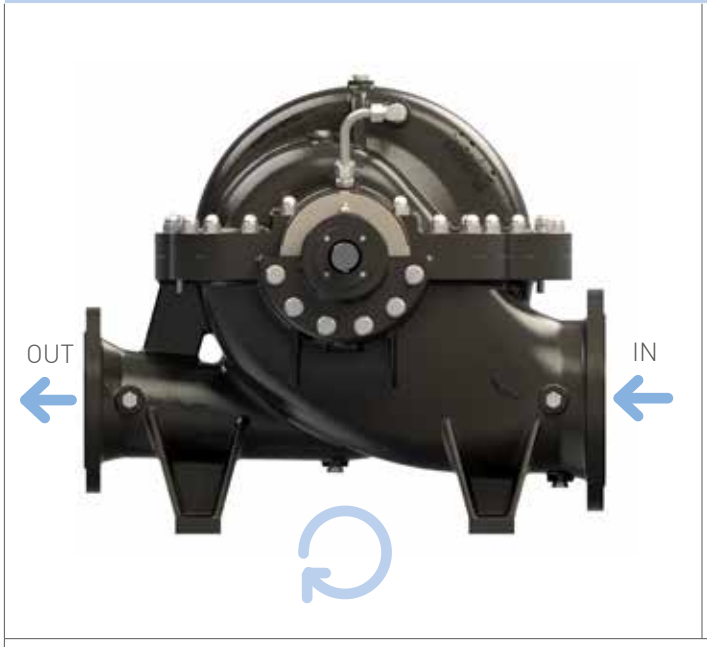

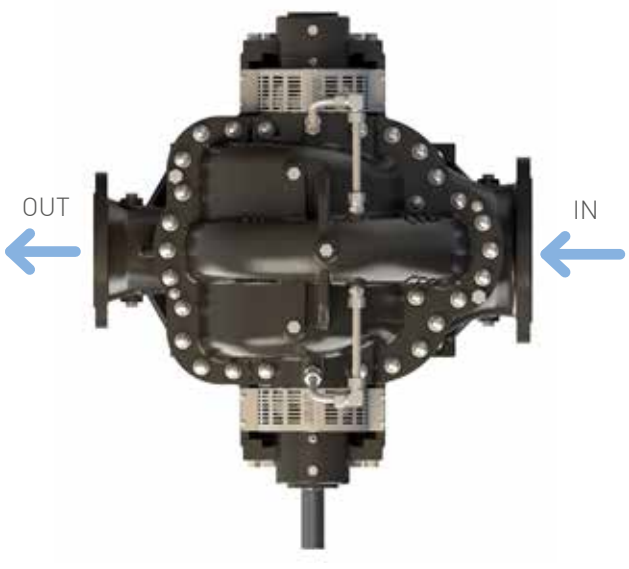

Pic.1

Counterclockwise rotation / DE side

Rotazione antioraria / Lato comando • Rotación en sentido anti-horario / lado del comando • Rotation anti-horaire / Côté entraînement • Drehung gegen den Uhrzeigersinn / Antriebsseite • Вращение против часовой стрелки относительно двигателя

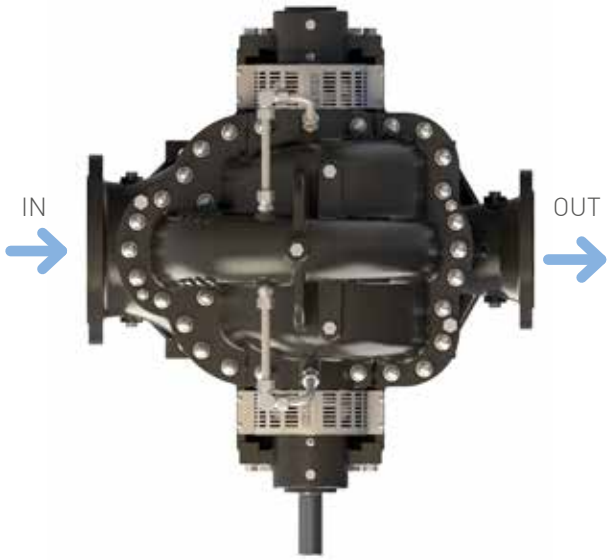

Pic.2 (Standard)

COMPLETE SET VERSIONS

HORIZONTAL INSTALLATION

COMPLETE SET WITH BASE, COUPLING AND ELECTRIC MOTOR FOR HORIZONTAL INSTALLATION

COMPLETE SET WITH BASE, COUPLING AND DIESEL ENGINE FOR HORIZONTAL INSTALLATION

VARIANTS

Complete set with one base both pump and motor for horizontal installation

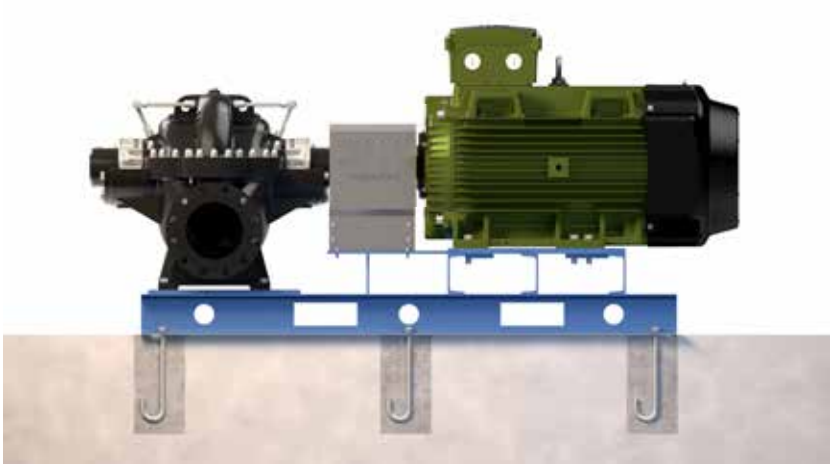

Complete set with two bases, one for the pump and one for the motor for horizontal installation

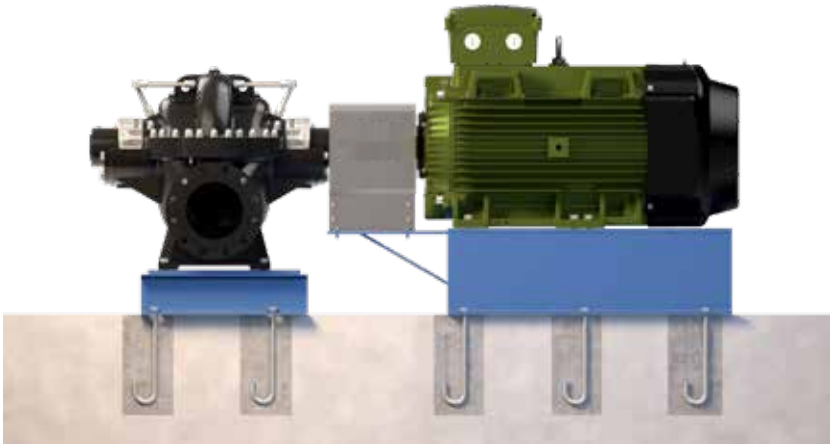

Complete set without base for direct installation on concrete base for horizontal installation

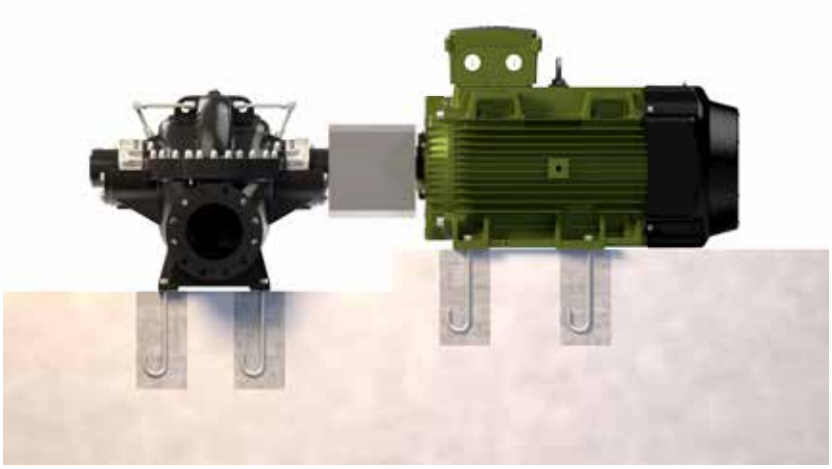

COMPLETE SET VERSIONS

VERTICAL INSTALLATION

COMPLETE SET WITH BASE, COUPLING AND ELECTRIC MOTOR FOR VERTICAL INSTALLATION

VARIANTS

Complete set with one base both for pump and motor for vertical installation

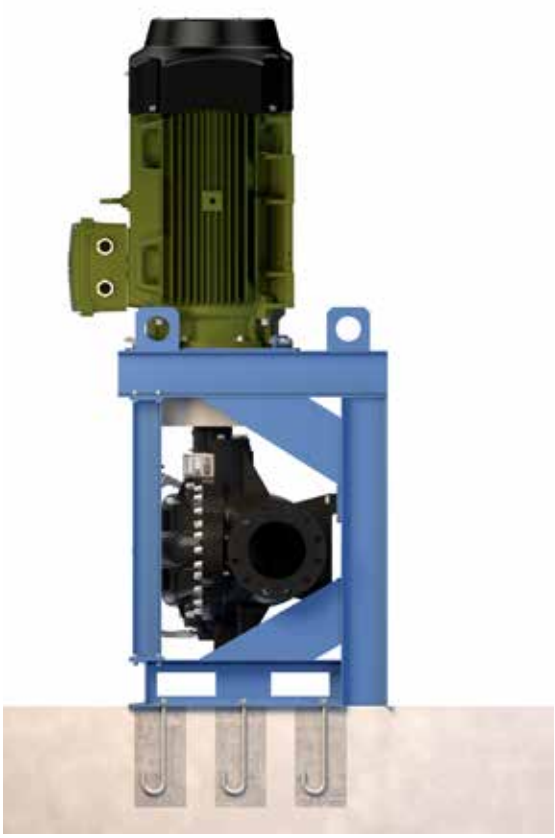

Complete set with one base for the pump, shaft line and motor for vertical installation

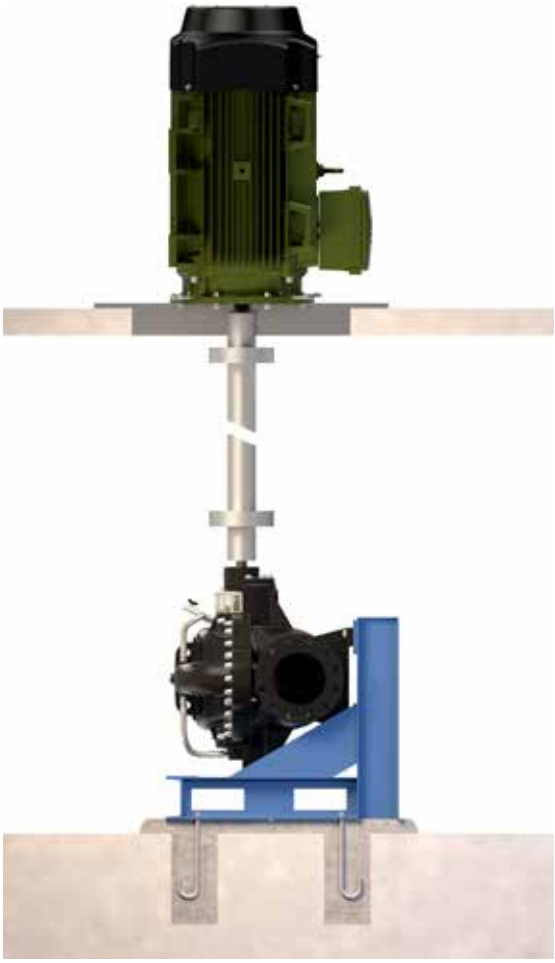

GENERAL TECHNICAL SPECIFICATIONS

DOUBLE SUCTION SPLIT CASE PUMP

APPLICATIONS
Recicling plants, HVAC, heating recovery, water supply, irrigation systems, water treatment plants, process and desalinization plants, booster and fire fighting sets, off-shore and naval field.

CONSTRUCTION FEATURES
Centrifugal split case pumps for horizontal installations, can be coupled with electric motors or endo thermic motors. The motor unit and the rotating part of the pump can be pulled out without removing the pump body from the pipeline system. Vertical installation version available on request.
Double volute construction to avoid the radial stresses on the bearings.
Pump with double wear ring (both side impeller and pump body).
SKD: bareshaft pump
SKDZ: electric pump group on base, complete with electric motor coupled through a joint.

IMPELLER
Double suction impeller, statically and dynamically balanced. Final balancing made on the complete and assembled rotor according to ISO1940.

SEALS
Standard version with soft packing.
On request: version with component mechanical seal, single or double cartridge mechanical seal.
Flushing seal by the recirculation of the liquid from the pump delivery.
On request different flushing systems.

SHAFT
Shaft dimensioned according to DIN 743, in stainless steel supported by stainless steel bushings.

BEARINGS
Grease lubricated bearings with greaser.

FLANGES
Flanges accoding to EN 1092, on request available different type of flanges.

COATING
Two-component epoxy enamel suitable for contact with drinking water. Corrosion resistance corresponding to C3M cycle according to EN12944-6 (C5M cycle on request).

SPECIAL VERSIONS
ACS certified version for use with drinking water on request
Special versions for vertical installation (SKD-V)
Versions with different materials (Bronze, Stainless steel AISI 316, Superduplex)
Versions with mechanical seals and special flushings
Version with oil lubricated bearings
Special couplings

FITTINGS ON REQUEST
Counter flanges kit
Temperature sensors
Vibraton sensors

PERFORMANCES TOLERANCES
Pumps: UNI EN ISO 9906: 2012- Grade 3B, other levels on request

MATERIALS AND MAIN PARTS

COMPONENTS		SKD		
		SKD Version		
		Standard	On request	
Casing		Refer to detailed table		
Impeller		Refer to detailed table		
Shaft		Stainless steel AISI431 (1.4057)	Stainless steel Duplex (1.4362)	Stainless steel Superduplex 1.4507
Shaft protection bushes		Stainless steel AISI431 (1.4057)	Stainless steel Duplex (1.4362)	Stainless steel Superduplex 1.4507
Impeller wear ring		Stainless steel AISI304 (1.4301)	Stainless steel AISI316 (1.4401)	Technopolymer
Body wear ring		Bronze G-CuSn10		Stainless steel AISI304 (1.4301)

	Standard	On request	
Sealing system			
	Soft packing	Mechanical seal	Cartridge seal

*Reinforced version (SKDR 250-630 / SKDR 250-750): shaft in stainless steel AISI630 (1.4542)

CASING

Model	Cast iron	Ductile cast iron	Stainless steel		Bronze	
	EN-GJL-250	EN-GJS-500	AISI316 (CF8M – 1.4408)	Superduplex 5A (1.4469 - CE3MN)	G-CuSn10 (CC480K)	Ni-Al Bronze
SKD 80-355	N.A.	S	C	C	C	C
SKD 125-270	S	R	C	C	C	C
SKD 125-335	S	R	C	C	C	R
SKD 150-400	S	R	C	C	C	R
SKD 150-500	S	C	C	C	C	C
SKD 200-315	S	R	C	C	C	C
SKD 200-400	S	R	C	C	C	R
SKD 200-630	N.A.	S	C	R	C	C
SKDR 200-630	N.A.	S	C	R	C	C
SKD 250-315	S	R	C	C	C	C
SKD 250-400	S	R	C	C	C	C
SKD 250-450	S	R	C	C	C	R
SKD 250-560	S	R	C	C	C	C
SKD 250-630	S	R	C	C	C	C
SKDR 250-630	N.A.	S	C	C	C	C
SKD 250-630-2	N.A.	S	C	C	C	C
SKD 250-750	S	R	C	C	C	C
SKDR 250-750	N.A.	S	C	C	C	C
SKD 300-500	N.A.	S	C	C	C	C
SKD 300-560	N.A.	S	C	C	C	C
SKD 500-550A	S	R	C	C	C	C
SKD 500-550B	S	R	C	C	C	C

IMPELLER

Model	Cast iron	Ductile cast iron	Precision casted stainless steel				Bronze	
	EN-GJL-250	EN-GJS-500	AISI304 (CF8 - 1.4308)	AISI316 (CF8M – 1.4408)	Duplex (1.4517)	Superduplex 5A (1.4469 - CE3MN)	G-CuSn10 (CC480K)	Ni-Al Bronze
SKD 80-355	N.A.	N.A.	S	R	C	R	C	C
SKD 125-270	N.A.	S	C	R	C	R	R	C
SKD 125-335	S	R	C	R	C	R	R	C
SKD 125-335	N.A.	S	C	R	C	R	R	C
SKD 150-400	N.A.	S	C	R	C	R	R	R
SKD 150-500	N.A.	N.A.	S	R	C	C	C	C
SKD 200-315	N.A.	S	C	R	C	R	C	R
SKD 200-400	N.A.	S	C	R	R	C	C	R
SKD 200-630	N.A.	S	C	R	R	R	C	R
SKDR 200-630	N.A.	S	C	R	R	R	C	R
SKD 250-315	N.A.	N.A.	S	R	R	R	C	C
SKD 250-400	N.A.	S	C	R	C	R	R	C
SKD 250-450	S	R	C	R	C	R	R	R
SKD 250-560	N.A.	S	C	R	C	R	R	R
SKD 250-630	N.A.	S	C	R	C	R	R	R
SKDR 250-630	N.A.	N.A.	C	S	C	R	R	R
SKD 250-630-2	N.A.	N.A.	C	S	C	C	C	C
SKD 250-750	N.A.	S	C	R	R	R	R	C
SKDR 250-750	N.A.	N.A.	C	S	R	R	R	C
SKD 300-500	N.A.	S	C	R	C	R	C	R
SKD 300-560	N.A.	N.A.	S	R	C	C	C	R
SKD 500-550A	S	R	C	R	R	R	R	C
SKD 500-550B	S	R	C	R	C	R	R	C

S: Standard
R: On request
N.A.: Not available
C: Check the feasibility and delivery times

SPECIAL VERSIONS

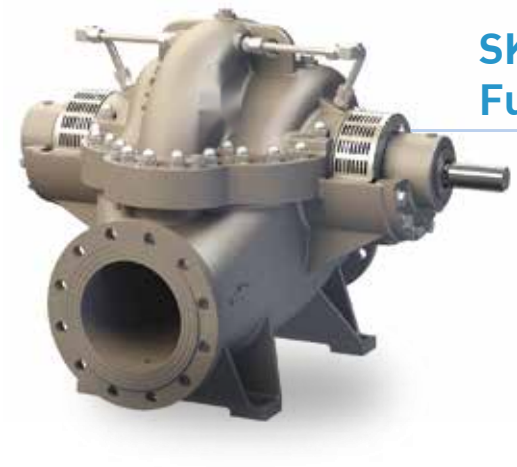

SKDX
Full stainless steel version

SKD-M
Full bronze version

SKDXD
Full superduplex version

ACS CERTIFIED CONFIGURATION AVAILABLE ON REQUEST

SKDE INCREASED EFFICIENCY VERSION

Adds up to 4 points of hydraulic efficiency compared to the standard performances shown in the curve

SENSORS UPON REQUEST

- Temperature sensors for bearings and/or wiring (PT100)
- Vibration sensors

HYDRAULIC FEATURES

1500 1/min

	Type / Tipo / Тип	P_2 kW	P_2 HP	Q	U.S.g.p.m.	0	352	396	440	528	616	704	793	859	969
					m^3/h	0	80	90	100	120	140	160	180	195	220
					l/s	0	22	25	28	33	39	44	50	54	61
SKD	80-355-285	15	20	H (m)		31,8	30,3	29,8	29	27	23,7	19,5			
SKD	80-355-302	18,5	25	H (m)		35,5	34,5	34	33,5	32	29,5	26,2	22		
SKD	80-355-316	22	30	H (m)		39	38	37,8	37,2	36	34	31,3	27,8	24,4	
SKD	80-355-340	30	40	H (m)		45,1	44,6	44,2	43,8	43	41,5	39,5	37	33,6	29,6

	Type / Tipo / Тип	P_2 kW	P_2 HP	Q	U.S.g.p.m.	0	396	528	704	881	1057	1233	1387	1585	1761	1893
					m^3/h	0	90	120	160	200	240	280	315	360	400	430
					l/s	0	25	33	44	56	67	78	88	100	111	119
SKD	125-270-230	11	15	H (m)		19,2	18,5	17,8	16,5	14,9	12,7	10,1	7,5			
SKD	125-270-246	15	20	H (m)		21,9	21,4	20,8	19,7	18,2	16,4	14,2	12	8,7		
SKD	125-270-258	18,5	25	H (m)		24,1	23,6	23,1	22,1	20,8	19,1	17,2	15,2	12,3	9,3	
SKD	125-270-268	22	30	H (m)		26	25,6	25,2	24,3	23	21,5	19,7	17,8	15,2	12,5	10,3

	Type / Tipo / Тип	P_2 kW	P_2 HP	Q	U.S.g.p.m.	0	418	528	704	881	1057	1299	1409	1607	1761
					m^3/h	0	95	120	160	200	240	295	320	365	400
					l/s	0	26	33	44	56	67	819	89	101	111
SKD	125-335-284	18,5	25	H (m)		28,6	27,7	27	25,3	22,6	19,1	14,2			
SKD	125-335-298	22	30	H (m)		31,8	30,7	30,1	28,7	26,4	23,3	18,5	16,2		
SKD	125-335-320	30	40	H (m)		38,2	37,4	36,8	35,2	32,7	29,5	25	23	18,5	
SKD	125-335-333	37	50	H (m)		42	41,1	40,5	39,1	36,7	33,8	29	27	23,1	19,5

	Type / Tipo / Тип	P_2 kW	P_2 HP	Q	U.S.g.p.m.	0	660	881	1101	1321	1541	1761	2025	2289	2466	2774
					m^3/h	0	150	200	250	300	350	400	460	520	560	630
					l/s	0	42	56	69	83	97	111	128	144	156	175
SKD	150-400-312	37	50	H (m)		36,5	35,4	33,5	31	28,2	25,4	22,2	16			
SKD	150-400-340	45	60	H (m)		43	42	41	39,2	36,7	34	31	26,3	19,6		
SKD	150-400-362	55	75	H (m)		49,5	48,4	47,3	45,7	43,6	40,9	38,2	34	28,5	22,2	
SKD	150-400-392	75	100	H (m)		59	57	56,3	55,3	53,7	51,4	48,5	44,8	40,3	36,7	29
SKD	150-400-395	90	125	H (m)		60	58	57,4	56,3	54,6	52,3	49,7	46	42	38,7	31,5

	Type / Tipo / Тип	P_2 kW	P_2 HP	Q	U.S.g.p.m.	0	925	1145	1321	1541	1761	1981	2113	2312	2586	2862	3082
					m^3/h	0	210	260	300	350	400	450	480	525	585	650	700
					l/s	0	58	72	83	97	111	125	133	146	163	181	194
SKD	150-500-432	90	120	H (m)		73	72	69,5	66,7	62	56	48,5	43				
SKD	150-500-455	110	150	H (m)		81		79	76,5	73	68	61,5	57	49,5			
SKD	150-500-480	132	180	H (m)		90		89	87	84	80	75	71,4	65	54,7		
SKD	150-500-505	160	220	H (m)		100		99,5	98	95,5	92,5	88,4	85	80	71,2	60,3	
SKD	150-500-525	220	270	H (m)		108		108	107	105	102	98,5	96	91,5	84,5	75	66,5

	Type / Tipo / Тип	P_2 kW	P_2 HP	Q	U.S.g.p.m.	0	1101	1321	1761	2201	2642	3082	3302	3654	4029	4403
					m^3/h	0	250	300	400	500	600	700	750	830	915	1000
					l/s	0	69	83	111	139	167	194	208	231	254	278
SKD	200-315-274	45	60	H (m)		29,3	26,7	25,3	22,9	20,7	18,9	15,4	11,5			
SKD	200-315-283	45	60	H (m)		32,4	30,1	28,8	26,2	23,9	22	20	18,1	12,4		
SKD	200-315-298	55	75	H (m)		35,5	33,6	32,3	29,9	27,4	25,3	23,5	22,5	19,8	13,5	
SKD	200-315-316	75	100	H (m)		39	37,1	36	33,7	31,2	29	26,9	26	24,3	21,3	15

	Type / Tipo / Тип	P_2 kW	P_2 HP	Q	U.S.g.p.m.	0	1321	1761	2422	3082	3742	4403	4711	5283	5548	5724
					m^3/h	0	300	400	550	700	850	1000	1070	1200	1260	1300
					l/s	0	83	111	153	194	236	278	297	333	350	361
SKD	200-400-350	90	125	H (m)		44,2	43,7	42,4	39,3	35,2	30,6	24,4	20,3			
SKD	200-400-370	110	150	H (m)		49,5	49	48	45,4	41,7	37,3	32,4	29,5	23		
SKD	200-400-388	132	180	H (m)		54,5	53,6	52,4	50,1	47	42,9	37,8	35,1	28,4	24,6	
SKD	200-400-400	160	220	H (m)		58	56,6	55,5	53,6	50,8	46,7	41,6	39	32,6	29,1	26,7

	Type / Tipo / Тип	P_2 kW	P_2 HP	Q	U.S.g.p.m.	0	1761	2201	2642	3082	3522	4007	4491	4755	4931
					m^3/h	0	400	500	600	700	800	910	1020	1080	1120
					l/s	0	111	139	167	194	222	253	283	300	311
SKD	200-630-490	200	270	H (m)		86,7	85	83	78,5	73	65,5				
SKD	200-630-525	250	340	H (m)		106	104	102	98,6	92,8	85,3	74,6			
SKD	200-630-554	315	430	H (m)		118	117	115	112	108	102	92,8	81,5		
SKD	200-630-577	355	480	H (m)		128	127	126	123	120	115	108	98	91,7	
SKD	200-630-592	400	540	H (m)		135	133	132	130	127	123	116	107	100	95,5

	Type / Tipo / Тип	P_2 kW	P_2 HP	Q	U.S.g.p.m.	0	1761	2642	3522	4007	4491	4755	4931	5283	5504
					m^3/h	0	400	600	800	910	1020	1080	1120	1200	1250
					l/s	0	111	167	222	253	283	300	311	333	347
SKDR	200-630-612	450	600	H (m)		144	142	140	134	128	120	115	111	102	
SKDR	200-630-630	500	670	H (m)		152	150	149	144	138	132	127	123	116	110

	Type Tipo Тип	P_2 kW	P_2 HP	Q	U.S.g.p.m.	0	2642	3082	3742	4403	5063	5724	6164	6824	7265
					m^3/h	0	600	700	850	1000	1150	1300	1400	1550	1650
					l/s	0	167	194	236	278	319	361	389	431	458
SKD	250-315-300	75	100	H (m)		30,2	23,6	22,3	20,5	18,9	17,3	14,8	12,3		
SKD	250-315-315	90	125	H (m)		33,4	27,1	25,6	23,6	21,9	20,4	18,7	17	13,3	
SKD	250-315-325	110	150	H (m)		35,5	29,4	27,8	25,8	24	22,5	20,9	19,6	16,9	14,2

	Type Tipo Тип	P_2 kW	P_2 HP	Q	U.S.g.p.m.	0	2201	3082	3963	4843	5724	6472	7485	7705	8145	8365
					m^3/h	0	500	700	900	1100	1300	1470	1700	1750	1850	1900
					l/s	0	139	194	250	306	361	408	472	486	514	528
SKD	250-400-335	110	150	H (m)		40,5	38,5	36	32,9	29,7	24,5	16,5				
SKD	250-400-350	132	180	H (m)		44,5	42,6	40,1	37,3	34	30,8	27,5	19,7			
SKD	250-400-365	160	220	H (m)		48,5	46,8	44,4	41,6	38,5	35,3	32,5	27	25,6		
SKD	250-400-389	200	270	H (m)		55	53,3	50,6	48,6	46,3	44,1	41,6	35,4	33,4	28,4	
SKD	250-400-395	250	340	H (m)		57	54,7	52,2	50	48	46,1	44	37,6	35,6	30,4	27,5

	Type Tipo Тип	P_2 kW	P_2 HP	Q	U.S.g.p.m.	0	2201	2642	3302	3742	4403	5063	5724	6428	7045	7485
					m^3/h	0	500	600	750	850	1000	1150	1300	1460	1600	1700
					l/s	0	139	167	208	236	278	319	361	406	444	472
SKD	250-450-395	160	220	H (m)		56	55,2	53,9	51,7	49,7	46,2	42,3	37,4	30,5		
SKD	250-450-420	200	270	H (m)		64	63,8	62,8	60,7	58,7	55,5	52,1	47,7	41,9	34,7	
SKD	250-450-445	250	340	H (m)		74	72,8	71,5	69,5	67,7	64,7	61,4	57,9	52,5	46,9	42

	Type Tipo Тип	P_2 kW	P_2 HP	Q	U.S.g.p.m.	0	2201	2862	3522	4183	4843	5724	6428	6824	7133	7265
					m^3/h	0	500	650	800	950	1100	1300	1460	1550	1620	1650
					l/s	0	139	181	222	264	306	361	406	431	450	458
SKD	250-560-480	250	340	H (m)		91	85	81,8	76,2	69,5	62	45,7				
SKD	250-560-514	315	430	H (m)		105	98,4	96	92	86,4	79,4	68,4	57			
SKD	250-560-530	355	480	H (m)		111	105	103	99	94,4	87,4	77,5	67,9	60,4		
SKD	250-560-545	400	540	H (m)		117	111	109	106	102	95,5	85,8	77,3	71,4	65,8	
SKD	250-560-550	450	610	H (m)		120	113	112	109	104	98,1	88,8	80,5	74,9	69,3	67,4

	Type Tipo Тип	P_2 kW	P_2 HP	Q	U.S.g.p.m.	0	1981	2422	3082	3522	4183	4623	5063	5283	5504
					m^3/h	0	450	550	700	800	950	1050	1150	1200	1250
					l/s	0	125	153	194	222	264	292	319	333	347
SKD	250-630-550	355	480	H (m)		115	116	115	111	108	102	98	90,5		
SKD	250-630-565	400	540	H (m)		122	122	122	119	115	110	106	101	96,6	
SKD	250-630-585	450	610	H (m)		131	131	131	128	125	120	117	112	110	106
SKD	250-630-615	500	680	H (m)		145	145	145	143	140	136	132	128	124	120

	Type Tipo Тип	P_2 kW	P_2 HP	Q	U.S.g.p.m.	0	1981	2422	3082	3522	4183	4623	5283	5724	5988
					m^3/h	0	450	550	700	800	950	1050	1200	1300	1360
					l/s	0	125	153	194	222	264	292	333	361	378
SKDR	250-630-640	560	760	H (m)		157	157	156	153	150	146	144	139	127	
SKDR	250-630-655	630	860	H (m)		165	164	164	161	159	155	152	148	141	133

	Type Tipo Тип	P_2 kW	P_2 HP	Q	U.S.g.p.m.	0	2201	2642	3082	3522	3963	4403	4711	5063	5283	5504
					m^3/h	0	500	600	700	800	900	1000	1070	1150	1200	1250
					l/s	0	139	167	194	222	250	278	297	319	333	347
SKD	250-630/2-600	900	1200	H (m)		275	271	269	264	258	251	242	232			
SKD	250-630/2-620	1000	1340	H (m)		293	290	288	284	279	272	265	258	249		
SKD	250-630/2-635	1100	1475	H (m)		308	305	303	300	295	289	281	276	268	260	
SKD	250-630/2-645	1200	1610	H (m)		318	315	313	310	306	300	293	288	281	275	266

	Type Tipo Тип	P_2 kW	P_2 HP	Q	U.S.g.p.m.	0	3082	3522	3963	4403	4843	5283	5724	6164
					m^3/h	0	700	800	900	1000	1100	1200	1300	1400
					l/s	0	194	222	250	278	306	333	361	389
SKD	250-750-655	630	860	H (m)		168	163	161	158	154	149	143	136	
SKD	250-750-678	710	960	H (m)		180	175	174	171	168	164	159	152	145

	Type Tipo Тип	P_2 kW	P_2 HP	Q	U.S.g.p.m.	0	3082	3522	3963	4403	4843	5283	5724	6516	7001	7485
					m^3/h	0	700	800	900	1000	1100	1200	1300	1480	1590	1700
					l/s	0	1944	2222	2500	2778	3056	3333	3611	4111	4417	4722
SKDR	250-750-700	800	1070	H (m)		189	187	186	184	182	178	174	168	156		
SKDR	250-750-725	900	1200	H (m)		203	201	200	199	197	194	190	186	175	167	
SKDR	250-750-750	1000	1340	H (m)		218	216	215	214	212	210	207	203	194	188	179

	Type Tipo Тип	P_2 kW	P_2 HP	Q	U.S.g.p.m.	0	4183	4843	5724	6604	7925	8806	9906	10567	11007
					m^3/h	0	950	1100	1300	1500	1800	2000	2250	2400	2500
					l/s	0	2639	3056	3611	4167	5000	5556	6250	6667	6944
SKD	300-500-445	355	480	H (m)		76,2	64,5	62,4	59,8	57,1	53,1	48,8	41,2		
SKD	300-500-460	400	540	H (m)		81,3	70,3	68	64,9	62,4	58,5	55,4	49,7	44,1	
SKD	300-500-475	450	610	H (m)		87	75,8	73,5	70,5	67,8	64	61	56,6	52,7	49,3

	Type Tipo Тип	P_2 kW	P_2 HP	Q	U.S.g.p.m.	0	4447	6064	8086	9986	10714	11320	12129	12937	13746	14150
					m^3/h	0	1100	1500	2000	2470	2650	2800	3000	3200	3400	3500
					l/s	0	306	417	556	686	736	778	833	889	944	972
SKD	300-560-455	450	610	H (m)		86	75,6	69,5	59,7	46,8						
SKD	300-560-470	500	680	H (m)		91,8	81,7	75,6	66,4	54,3	47,8					
SKD	300-560-485	560	760	H (m)		97,8	88	82,3	73,3	62	56,3	50				
SKD	300-560-500	630	860	H (m)		104	94,5	89,2	80,6	70,1	65	59,9	51,3			
SKD	300-560-518	710	960	H (m)		112	102	97,5	89,4	80,1	76,1	72,8	67,6	61,6		
SKD	300-560-524	750	1000	H (m)		114	105	100	92,4	83	79,2	75,9	71,1	65,3		
SKD	300-560-534	800	1070	H (m)		119	110	105	97,4	88,5	84,7	81,4	76,7	71,5	65,4	
SKD	300-560-545	900	1200	H (m)		124	115	110	103	94	90,2	87,3	82,8	78	72,5	68,6

HYDRAULIC FEATURES

1800 1/min

SKD	Type / Tipo / Тип	P_2		Q	U.S.g.p.m.	0	484	572	660	793	925	1013	1145	1233	1277
					m^3/h	0	110	130	150	180	210	230	260	280	290
		kW	HP		l/s	0	31	36	42	50	58	64	72	78	81
	80-355-285	30	40	H (m)		46	42,5	40,5	38,3	34	28				
	80-355-302	30	40			51,5	48,7	47	44,8	41	36,7	32,7			
	80-355-316	37	50			56	54,3	52,5	50,8	47,3	43,2	40,2	34		
	80-355-332	45	60			62	60,4	59	57,6	54,5	50,7	48	43	38,7	
	80-355-340	55	75			65	63,7	62,6	61	58,2	54,8	52	47,5	44	42

SKD	Type / Tipo / Тип	P_2		Q	U.S.g.p.m.	0	660	881	1101	1321	1541	1673	1849	2025	2201
					m^3/h	0	150	200	250	300	350	380	420	460	500
		kW	HP		l/s	0	42	56	69	83	97	106	117	128	139
	125-270-234	22	30	H (m)		29	26,9	24,9	22,3	19,1	15,4	12,5			
	125-270-246	30	40			32	30,2	28,4	26	23,2	20	17,6	13,6		
	125-270-258	30	40			35,2	33,6	32,1	30	27,4	24,4	22,3	19,2	15	
	125-270-268	37	50			38	36,5	35,2	33,3	31	28,1	26,2	23,3	20	16,1

SKD	Type / Tipo / Тип	P_2		Q	U.S.g.p.m.	0	660	881	1101	1321	1629	1805	1981	2069
					m^3/h	0	150	200	250	300	370	410	450	470
		kW	HP		l/s	0	42	56	69	83	103	114	125	131
	125-335-296	37	50	H (m)		47,5	44,4	40,9	36,3	31,2	23,6			
	125-335-310	45	60			52	49,5	46,4	42,1	37,2	30,1	25,5		
	125-335-326	55	75			57,5	55,4	52,9	49,1	44,4	37,4	33,2	28,3	
	125-335-333	75	100			60	58,1	55,7	52,1	47,5	40,3	36,5	32,2	29,5

SKD	Type / Tipo / Тип	P_2		Q	U.S.g.p.m.	0	969	1101	1321	1761	2245	2730	2906	3192	3390
					m^3/h	0	220	250	300	400	510	620	660	725	770
		kW	HP		l/s	0	61	69	83	111	142	172	183	201	214
	150-400-310	55	75	H (m)		51,5	48,7	47	43,8	36,3	25				
	150-400-342	75	100			62,5	61,1	60,2	57,5	51	42,3	30,3			
	150-400-356	90	125			69		65,9	63,5	57,7	49,7	38,5	32,2		
	150-400-380	110	150			80,5		76,2	74,9	69,7	62,3	53,1	48,3	36,8	
	150-400-395	132	180			88		83,1	81,9	77,8	70,9	62,5	59,3	52,2	45,7

SKD	Type / Tipo / Тип	P_2		Q	U.S.g.p.m.	0	1145	1321	1761	2422	2862	3302	3522	3698	3742
					m^3/h	0	260	300	400	550	650	750	800	840	850
		kW	HP		l/s	0	72	83	111	153	181	208	222	233	236
	150-500-460	200	270	H (m)		118	118	117	111	92	70				
	150-500-490	250	340			133	136	134	129	116	99	77			
	150-500-510	315	430			145		146	142	130	117	97	84		
	150-500-520	315	430			150		152	148	138	126	109	97	86	

SKD	Type / Tipo / Тип	P_2		Q	U.S.g.p.m.	0	1761	2201	2642	3082	3522	4051	4359	4843	4931
					m^3/h	0	400	500	600	700	800	920	990	1100	1120
		kW	HP		l/s	0	111	139	167	194	222	256	275	306	311
	200-315-288	75	100	H (m)		45,5	39,1	36,3	33,8	31,6	27,5	16,6			
	200-315-298	90	125			49	42,8	39,8	37,1	35	32,5	27,1	20,6		
	200-315-312	110	150			53	48,1	45,1	42,1	39,7	37,8	34,8	32,1	24,4	
	200-315-316	132	180			55	49,7	46,6	43,6	41,2	39,1	36,5	34,2	27,8	25,7

SKD	Type / Tipo / Тип	P_2		Q	U.S.g.p.m.	0	1761	2201	2642	3302	3963	4623	5283	5988	6516	6780
					m^3/h	0	400	500	600	750	900	1050	1200	1360	1480	1540
		kW	HP		l/s	0	111	139	167	208	250	292	333	378	411	428
	200-400-360	160	220	H (m)		67,5	66,4	64,5	62,5	58	53,2	48	40,8	30,5		
	200-400-384	200	270			77	75,3	74	72,2	68,4	64,2	59	52,9	45,1	36,2	
	200-400-400	250	340			83,5	81,2	80	78,4	75,2	71,6	66,4	60,3	52,7	44,7	40,3

SKDR	Type / Tipo / Тип	P_2		Q	U.S.g.p.m.	0	1937	2201	2642	3082	3522	3963	4843	5283	5504	5724
					m^3/h	0	440	500	600	700	800	900	1100	1200	1250	1300
		kW	HP		l/s	0	122	139	167	194	222	250	306	333	347	361
	200-630-525	450	610	H (m)		155	153	152	150	144	138	130	112			
	200-630-540	500	680			164	163	162	160	155	149	142	124	115		
	200-630-558	560	760			175	174	174	172	168	163	156	139	130	126	
	200-630-577	630	855			187	186	186	184	182	178	172	156	147	142	137

SKD	Type / Tipo / Тип	P_2		Q	U.S.g.p.m.	0	3302	3963	4623	5283	6384	7397	8454	8718
					m^3/h	0	750	900	1050	1200	1450	1680	1920	1980
		kW	HP		l/s	0	208	250	292	333	403	467	533	550
	250-315-300	132	180	H (m)		43,5	33,5	31,1	29,3	27,3	23,7	17,6		
	250-315-320	160	220			49,5	40	37,4	35,1	33,1	30,1	26,3	19,8	
	250-315-325	200	270			51	41,8	39	36,7	34,6	31,6	28,4	22,7	20,6

SKD	Type / Tipo / Тип	P_2		Q	U.S.g.p.m.	0	3302	3522	4403	5283	6164	7045	8454	9246	9774	10039
					m^3/h	0	750	800	1000	1200	1400	1600	1920	2100	2220	2280
		kW	HP		l/s	0	208	222	278	333	389	444	533	583	617	633
	250-400-345	200	270	H (m)		62	57,4	56,4	52,9	49,3	45,2	40,2	24,8			
	250-400-360	250	340			68	63,3	62,7	59,4	55,6	51,8	48,1	40	32,1		
	250-400-380	315	430			75,5	70,9	70,2	67,2	64,3	61	57,8	50,6	43,8	37,6	
	250-400-395	355	480			82	76,5	76	73	70,6	68,4	66,1	58,8	51,2	44,1	39

SKD	Type / Tipo / Тип	P_2		Q	U.S.g.p.m.	0	2642	3522	4403	5283	6164	7045	8101	8454	8806	8982
					m^3/h	0	600	800	1000	1200	1400	1600	1840	1920	2000	2040
		kW	HP		l/s	0	167	222	278	333	389	444	511	533	556	567
	250-450-408	315	430	H (m)		86,5	86	82,9	78,7	73,6	67,6	59,8	47,3			
	250-450-420	355	480			92,5	92,2	89,3	85	80,3	74,3	67,3	55,2	50,2		
	250-450-435	400	540			100,5	99,8	96,8	92,8	88,1	82,6	76,2	65,3	60,8	55,6	
	250-450-445	450	610			106	105	102	97,9	93,5	88	81,9	71,8	67,8	62,7	60,1

SKD	Type / Tipo / Тип	P_2		Q	U.S.g.p.m.	0	2642	3522	4403	5283	6164	6957	7353	7705	8145	8718
					m^3/h	0	600	800	1000	1200	1400	1580	1670	1750	1850	1980
		kW	HP		l/s	0	167	222	278	333	389	439	464	486	514	550
	250-560-485	450	610	H (m)		134	125	120	111	100	86,5	68,4				
	250-560-500	500	680			142	134	129	121	111	98	82,8	72,9			
	250-560-514	560	760			150	142	138	131	122	110	97,6	89,6	82,3		
	250-560-530	630	860			159	151	148	142	133	122	111	104	97,6	87,7	
	250-560-550	710	960			172	164	161	155	147	137	127	121	116	108	96,4

SKDR	Type / Tipo / Тип	P_2		Q	U.S.g.p.m.	0	2201	2862	3522	4183	4843	5504	6384	6604
					m^3/h	0	500	650	800	950	1100	1250	1450	1500
		kW	HP		l/s	0	139	181	222	264	306	347	403	417
	250-630-565	710	960	H (m)		175	176	176	172	166	160	153	138	
	250-630-590	800	1090			191	192	192	190	185	179	172	161	156
	250-630-616	900	1200			209	209	210	208	204	198	192	179	173

SKD	Type / Tipo / Тип	P_2		Q	U.S.g.p.m.	0	4403	5724	7045	8365	9686	11007	12108	12768
					m^3/h	0	1000	1300	1600	1900	2200	2500	2750	2900
		kW	HP		l/s	0	278	361	444	528	611	694	764	806
	300-500-450	630	860	H (m)		112	98	93,1	88,1	83,1	78,2	71,1	60,9	
	300-500-462	710	960			118	104	99,4	94,1	89,2	84,8	78,8	70,9	64,5

HYDRAULIC FEATURES

3000 1/min

SKD	Type Tipo Тип	P_2		Q	U.S.g.p.m.	0	881	1101	1321	1453	1585	1717	1827	1893
					m^3/h	0	200	250	300	330	360	390	415	430
		kW	HP		l/s	0	56	69	83	92	100	108	115	119
	80-355-310	160	220	H (m)		152	142	132	118	109	100			
	80-355-320	200	270			163	154	144	132	123	114	105		
	80-355-330	200	270			172	165	157	145	137	128	119	112	
	80-355-335	250	340			178	171	163	152	144	135	126	118	115

SKD	Type Tipo Тип	P_2		Q	U.S.g.p.m.	0	969	1321	1761	2201	2642	2972	3082	3170
					m^3/h	0	220	300	400	500	600	675	700	720
		kW	HP		l/s	0	61	83	111	139	167	188	194	200
	125-270-228	90	125	H (m)		71	70	65	57	48,7	38,8			
	125-270-241	110	150			81	81	76,5	69,2	61,4	51,5	38		
	125-270-252	132	180			92	89	85,6	79,5	71,7	61,6	50	46	
	125-270-268	160	220			104	101	98	92,2	84,6	75	66,5	63,7	60

SKD	Type Tipo Тип	P_2		Q	U.S.g.p.m.	0	1101	1321	1541	1761	1981	2201	2510	2774	3170	3302
					m^3/h	0	250	300	350	400	450	500	570	630	720	750
		kW	HP		l/s	0	69	83	97	111	125	139	158	175	200	208
	125-335-272	132	180	H (m)		114	102	94,7	86,5	79	70	56				
	125-335-290	160	220			130	119	113	106	98,3	90,4	81,8	64			
	125-335-306	200	270			145	136	131	124	117	109	101	88,3	72,2		
	125-335-326	250	340			165	156	152	147	140	132	125	114	104	80	
	125-335-333	315	430			171	164	160	155	149	142	134	123	113	94	84,3

3600 1/min

SKD	Type Tipo Тип	P_2		Q	U.S.g.p.m.	0	969	1321	1761	2201	2642	3170	3588	3742	3786
					m^3/h	0	220	300	400	500	600	720	815	850	860
		kW	HP		l/s	0	61	83	111	139	167	200	226	236	239
	125-270-228	160	220	H (m)		106	102	98	89,5	79,8	70,5	55			
	125-270-243	200	270			123	120	116	109	100	91	76,5	55,4		
	125-270-256	250	340			138	134	131	125	118	108	93	76,8	70,5	
	125-270-268	315	430			150	147	144	139	131	121	108	94,3	89,5	88

HYDRAULIC FEATURES

750 1/min

SKD	Type / Tipo / Тип	P_2		Q	U.S.g.p.m.	0	5283	6604	7925	9246	11007	12328	13869	14970
					m³/h	0	1200	1500	1800	2100	2500	2800	3150	3400
		kW	HP		l/s	0	333	417	500	583	694	778	875	944
	500-550A-510	132	180			20,5	18,5	18,1	17,6	17,2	15,4	12,5		
	500-550A-540	160	220		H (m)	23	21,1	20,6	20,1	19,7	18,6	17,4	13,9	
	500-550A-560	200	270			24,6	22,9	22,3	21,8	21,4	20,7	19,8	17,8	14,8

SKD	Type / Tipo / Тип	P_2		Q	U.S.g.p.m.	0	5283	6604	7925	9246	10567	11888	12768	13869	15410
					m³/h	0	1200	1500	1800	2100	2400	2700	2900	3150	3500
		kW	HP		l/s	0	333	417	500	583	667	750	806	875	972
	500-550B-480	110	150			20	17,6	16,7	16	15,4	14,3	11,7	8,8		
	500-550B-502	132	180		H (m)	22	19,6	18,7	17,9	17,3	16,6	15,3	13,5	9,6	
	500-550B-530	160	220			24,5	22,2	21,4	20,5	19,8	19,1	18,3	17,6	15,9	11

900 1/min

SKD	Type / Tipo / Тип	P_2		Q	U.S.g.p.m.	0	5944	7045	8806	10567	12328	14089	16291	17611
					m³/h	0	1350	1600	2000	2400	2800	3200	3700	4000
		kW	HP		l/s	0	375	444	556	667	778	889	1028	1111
	500-550A-480	200	270			27,8	25,2	24,7	24	23,1	21,2	16,3		
	500-550A-502	250	340		H (m)	32,6	30,1	29,6	28,8	28,1	27,1	24,7	18	
	500-550A-560	315	430			35,6	33,1	32,6	31,8	31	30,4	29,3	26,2	22,5

SKD	Type / Tipo / Тип	P_2		Q	U.S.g.p.m.	0	7045	8806	10567	12328	14089	15410	17171	18492
					m³/h	0	1600	2000	2400	2800	3200	3500	3900	4200
		kW	HP		l/s	0	444	556	667	778	889	972	1083	1167
	500-550B-484	200	270			29,4	25,3	24,1	22,9	21,7	18,3	12,4		
	500-550B-512	250	340		H (m)	33	29	27,8	26,5	25,4	23,8	21,2	14,3	
	500-550B-530	315	430			33,5	31,4	30,2	28,8	27,7	26,6	25,3	21,4	15,3

1000 1/min

SKD	Type / Tipo / Тип	P_2		Q	U.S.g.p.m.	0	1819	2426	2830	3234	3639	4043	4245	4649	4851	5054
					m³/h	0	450	600	700	800	900	1000	1050	1150	1200	1250
		kW	HP		l/s	0	125	167	194	222	250	278	292	319	333	347
	250-400-347	37	50			19,5	17,7	16,2	15,1	13,9	12,3	9,8	7,8			
	250-400-360	45	60		H (m)	21	19,4	17,9	16,8	15,8	14,7	13,4	12,7	10,5		
	250-400-384	55	75			24	22,1	20,9	20,1	19,4	18,5	17,4	16,7	14,6	13,2	
	250-400-395	75	100			25,6	23,4	22,2	21,6	21	20,2	19,2	18,4	16,3	14,8	12,8

SKD	Type / Tipo / Тип	P_2		Q	U.S.g.p.m.	0	1415	2021	2426	2830	3234	3639	4043	4245	4649
					m³/h	0	350	500	600	700	800	900	1000	1050	1150
		kW	HP		l/s	0	97	139	167	194	222	250	278	292	319
	250-450-395	45	60			25,3	24,4	23	21,6	20,1	18,2	15,7	12,6		
	250-450-410	55	75		H (m)	27,7	26,8	25,3	24	22,6	20,8	18,7	15,7	14	
	250-450-445	75	100			32,9	32,2	30,9	29,7	28,4	26,8	25,1	22,8	21,5	18

SKD	Type / Tipo / Тип	P_2		Q	U.S.g.p.m.	0	3234	4043	4851	5660	6469	6873	7479	8490	9501	9703
					m³/h	0	800	1000	1200	1400	1600	1700	1850	2100	2350	2400
		kW	HP		l/s	0	222	278	333	389	444	472	514	583	653	667
	300-560-458	132	180			39,2	34,2	32	29,4	26,6	23,2	21,2				
	300-560-480	160	220			43	38,2	36,2	33,9	31,2	28,3	26,6	23,3			
	300-560-509	200	270		H (m)	48,4	43,9	42	40	37,6	34,8	33,3	31	26,1		
	300-560-540	250	340			54,5	50,1	48,5	46,7	44,4	41,9	40,6	38,3	34,5	29,5	
	300-560-545	250	340			55,5	51,1	49,6	47,7	45,5	43,1	41,8	39,6	35,8	31,3	30,2

1000 1/min

SKD	Type Tipo Тип	P_2		Q	U.S.g.p.m.	0	7045	8806	11007	13209	14750	15410	16291	17391	18712	19813
					m³/h	0	1600	2000	2500	3000	3350	3500	3700	3950	4250	4500
		kW	HP		l/s	0	444	556	694	833	931	972	1028	1097	1181	1250
	500-550A-480	200	270	H (m)		29,2	25	24,2	22,5	20,7	19,3					
	500-550A-492	250	340			32,2	28,3	27,6	26,3	24,4	22,8	22,2				
	500-550A-506	315	430			35,7	32,2	31,5	30,4	28,7	27,3	26,6	26			
	500-550A-524	355	480			38,3	34,8	34,2	33,2	31,6	30,2	29,6	28,7	27,8		
	500-550A-544	400	540			41,2	37,7	37	36,2	35	33,8	33,2	32,2	31,1	29,8	
	500-550A-560	450	610			43,6	40,1	39,4	38,6	37,5	36,5	36,1	35,2	34,1	32,8	31,9

SKD	Type Tipo Тип	P_2		Q	U.S.g.p.m.	0	417	472	9686	11447	13209	15190	15850	17611
					m³/h	0	1500	1700	2200	2600	3000	3450	3600	4000
		kW	HP		l/s	0	6604	7485	611	722	833	958	1000	1111
	500-550B-455	200	270	H (m)		33	26,4	25,5	23,4	22	21	18		
	500-550B-480	250	340			37	29,9	29,1	27	25,6	24,3	22,9	22,2	
	500-550B-490	315	430			38,5		30,7	28,6	27	25,7	24,4	23,9	21,2

1200 1/min

SKD	Type Tipo Тип	P_2		Q	U.S.g.p.m.	0	2021	2426	2830	3234	3639	4043	4851	5660	5862	6064
					m³/h	0	500	600	700	800	900	1000	1200	1400	1450	1500
		kW	HP		l/s	0	139	167	194	222	250	278	333	389	403	417
	250-400-360	75	100	H (m)		30,2	28,1	27,1	26	24,8	23,5	22,3	19,4	14,5		
	250-400-374	90	125			32,6	30,5	29,5	28,5	27,4	26,3	25,2	22,6	18,2	16.3	
	250-400-395	110	150			36,5	34	33	32,1	31,3	30,6	29,9	27,7	22,8	20,9	18,5

SKD	Type Tipo Тип	P_2		Q	U.S.g.p.m.	0	1617	2021	2426	2830	3234	3639	4043	4851	5256	5458
					m³/h	0	400	500	600	700	800	900	1000	1200	1300	1350
		kW	HP		l/s	0	111	139	167	194	222	250	278	333	361	375
	250-450-408	90	125	H (m)		38,4	38,1	37,2	36,1	34,4	32,8	30,7	28,3	22,1		
	250-450-425	110	150			42,3	42	41	39,8	38,5	36,9	35	31,7	27,1	23,1	
	250-450-445	132	180			47,2	46,7	45,7	44,5	43.1	41,5	39,8	36,8	32.9	29,6	27,2

SKD	Type Tipo Тип	P_2		Q	U.S.g.p.m.	0	4043	5054	6064	7075	8086	8692	9703	10309	10916	11724
					m³/h	0	1000	1250	1500	1750	2000	2150	2400	2550	2700	2900
		kW	HP		l/s	0	278	347	417	486	556	597	667	708	750	806
	300-560-467	250	340	H (m)		58,8	51,1	47,9	44,2	39,7	34,7	31,1				
	300-560-494	315	430			65,8	58,6	55,6	52,2	48,2	43,8	40,8	34,9			
	300-560-511	355	480			70,1	63,3	60,6	57,3	53,6	49,4	46,7	41,5	37,6		
	300-560-528	400	540			75,1	68,2	65,7	62,7	59,1	55,1	52,5	48	44,5	40,7	
	300-560-545	450	610			80,1	73,4	71	68	64,7	61	58,4	53,9	51,1	47,8	42,9

SKD	Type Tipo Тип	P_2		Q	U.S.g.p.m.	0	6164	8806	11007	13209	15410	17611	17832	18492
					m³/h	0	1400	2000	2500	3000	3500	4000	4050	4200
		kW	HP		l/s	0	389	556	694	833	972	1111	1125	1167
	500-550A-480	400	540	H (m)		42,1	36,8	35,8	34,6	32,8	30,3	28,1		
	500-550A-484	400	540			43,5	38,5	37,4	36	34,3	32	29,7	29,3	
	500-550A-494	450	610			46,7	42,1	41	39,9	38,3	36,2	33,7	33,3	32,2

SKD	Type Tipo Тип	P_2		Q	U.S.g.p.m.	0	8806	11007	13209	15410	16731	18272	18712	19373
					m³/h	0	2000	2500	3000	3500	3800	4150	4250	4400
		kW	HP		l/s	0	556	694	833	972	1056	1153	1181	1222
	500-550B-455	355	480	H (m)		47,6	37	34,4	32,3	30,6	29,2	26,3		
	500-550B-465	400	540			49,7	39	36,5	34,2	32,6	31,2	28,7	27,8	
	500-550B-485	450	610			54	43,2	40,8	38,3	36,3	35,4	34	33,6	32,8

BARE SHAFT PUMPS DIMENSIONS AND WEIGHTS

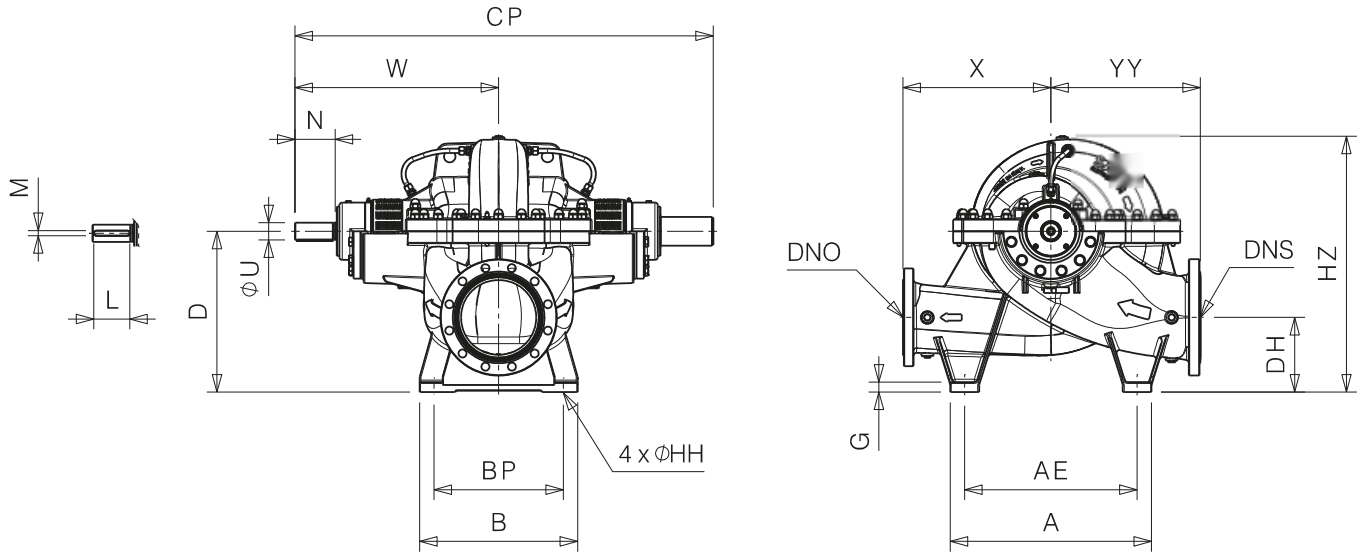

Type	DNS	DNO	A [mm]	B [mm]	AE [mm]	BP [mm]	CP [mm]	D [mm]	DH [mm]	G [mm]	Ø HH [mm]	HZ [mm]	L [mm]	M [mm]	N [mm]	Ø U [mm]	W [mm]	X [mm]	YY [mm]	kg
SKD 80-355	150	80	520	390	450	340	944	375	163	20	18	613	100	12	110	42	530	350	350	300
SKD 125-270	200	125	520	390	450	340	944	400	200	20	18	635	100	12	110	42	530	370	370	305
SKD 125-335	200	125	520	390	450	340	944	400	200	20	18	640	100	12	110	42	530	370	370	315
SKD 150-400	200	150	520	390	450	340	980	425	205	25	18	705	100	12	110	42	546	400	400	400
SKD 150-500	200	150	820	600	720	500	1460	500	220	40	23	850	125	18	140	60	707	520	650	500
SKD 200-315	300	200	600	440	510	360	1225	500	250	30	22	765	100	12	110	42	594	441	441	720
SKD 200-400	250	200	700	550	600	450	1456	560	260	35	23	895	125	18	140	60	708,5	515	520	800
SKD 200-630	250	200	846	550	785	490	1436	560	240	27	23	960	125	20	140	70	718	548	675	1050
SKDR 200-630	250	200	846	550	785	490	1540	560	240	27	23	960	125	20	140	70	760	548	675	1100
SKD 250-315	350	250	800	600	730	540	1460	600	285	30	23	900	125	18	140	60	707	550	600	750
SKD 250-400	350	250	750	600	650	520	1460	600	285	30	23	930	125	18	140	60	707	550	550	770
SKD 250-450	300	250	800	600	700	520	1460	600	270	30	23	975	125	18	140	60	707	550	550	935
SKD 250-560	300	250	800	600	700	520	1500	630	280	30	23	1015	125	20	140	70	740	550	600	1095
SKD 250-630	300	250	900	600	800	520	1505	670	290	40	23	1130	125	20	140	70	740	600	700	1260
SKDR 250-630	300	250	900	600	800	520	1583	670	290	40	23	1130	125	20	140	70	780	600	700	1300
SKDR 250-750	300	250	1000	650	900	570	1800	670	290	40	23	1140	160	22	170	80	895	650	800	1800
SKD 300-500	400	300	1050	600	950	520	1605	710	340	26	23	1105	125	20	140	70	792	655	655	1320
SKD 300-560	400	300	1050	600	950	520	1713	750	360	30	23	1175	160	22	170	80	850	650	650	1450
SKD 500-550	600	500	1160	1000	980	865	1666	1000	450	50	39	1580	160	22	170	80	920	760	900	3300

Dimensional drawings, weights and pictures are indicative only and not binding. Values according to motor's brand installed. We reserves itself the right to make changes without any prior notice. In case of order ask the specific drawing of the complete set supplied.

The impeller diameters shown are purely indicative and not binding.

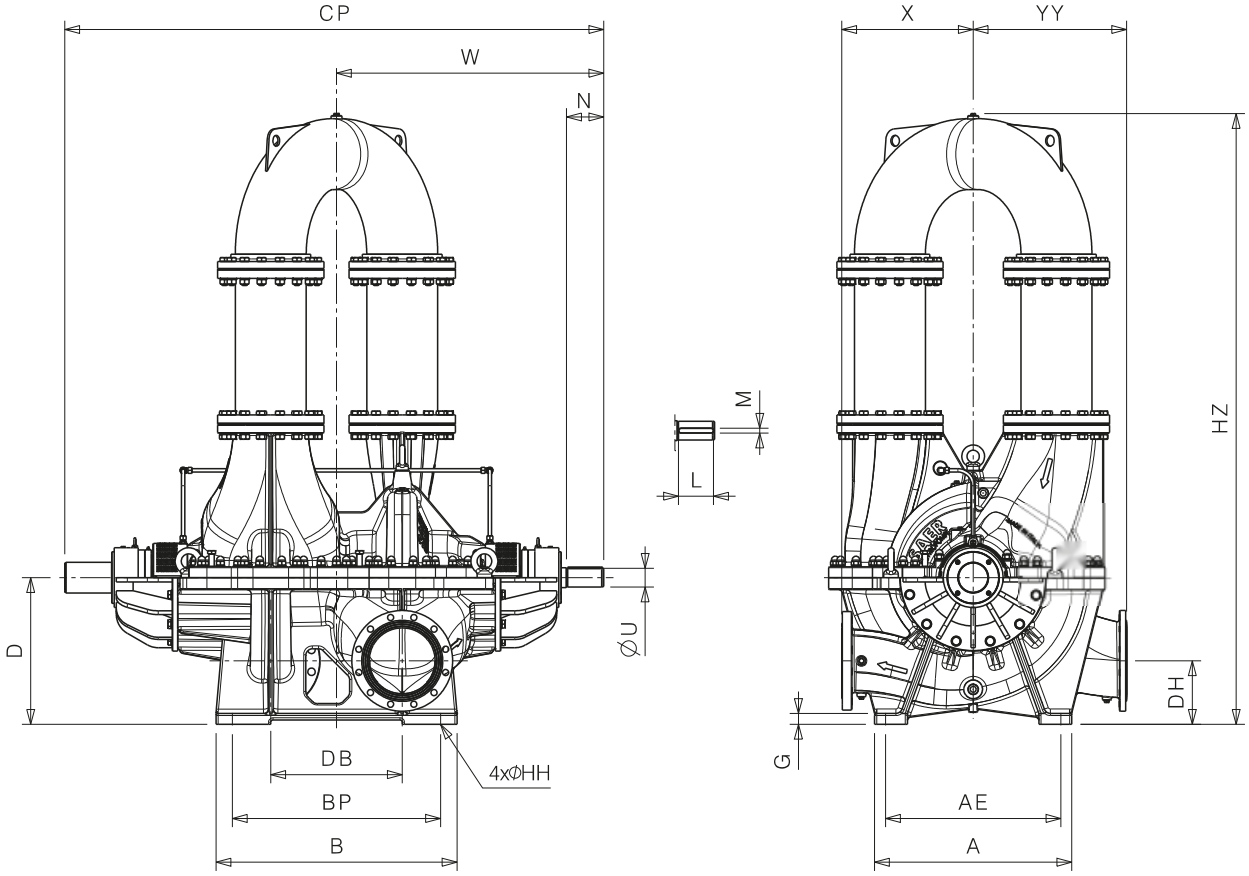

Type	A [mm]	B [mm]	AE [mm]	BP [mm]	CP [mm]	D [mm]	DH [mm]	DB [mm]	G [mm]	Ø HH [mm]	HZ [mm]	L [mm]	M [mm]	N [mm]	Ø U [mm]	W [mm]	X [mm]	YY [mm]	kg
250-630/2	900	1100	800	950	2460	670	290	600	50	42	2790	160	22	170	85	1220	600	700	3510

FLANGES DIMENSIONS

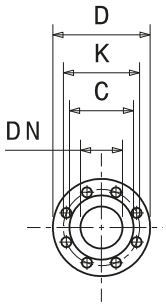

DN	PN	D[mm]	K[mm]	C[mm]	Holes • Fori • Дырки	
					Ø [mm]	n
80	25	200	160	138	19	8
125	16	250	210	184	19	8
150	16	285	240	211	23	8
150	25	300	250	211	28	8
200	16	340	295	266	23	12
200	25	360	310	274	28	12
250	16	405	355	319	28	12
250	25	425	370	330	31	12
250	40	450	385	345	34	12
300	16	460	410	370	28	12
300	25	485	430	389	31	16
350	16	520	470	429	28	16
400	16	580	525	480	31	16
500	10	670	620	585	28	20
600	10	780	725	685	31	20